Ruijie RG-AP880-E Access Point

Hardware Installation and Reference Guide

Document Version: V1.2

Date: August 16, 2023

Copyright © 2023 Ruijie Networks

Copyright

Copyright © 2023 Ruijie Networks

All rights are reserved in this document and this statement.

Any reproduction, excerption, backup, modification, transmission, translation or commercial use of this document or any portion of this document, in any form or by any means, without the prior written consent of Ruijie Networks is prohibited.

Trademark Ruijie Networks 锐捷 and Ruijie are owned by Ruijie Networks.

All other trademarks or registered trademarks mentioned in this document are owned by their respective owners.

Disclaimer

The products, services, or features you purchase are subject to commercial contracts and terms. Some or all of the products, services or features described in this document may not be within the scope of your purchase or use. Unless otherwise agreed in the contract, Ruijie Networks does not make any express or implied statement or guarantee for the content of this document.

Due to product version upgrades or other reasons, the content of this document will be updated from time to time. Ruijie Networks reserves the right to modify the content of the document without any notice or prompt.

This manual is for reference only. Ruijie Networks endeavors to ensure content accuracy and will not shoulder any responsibility for losses and damages caused due to content omissions, inaccuracies or errors.

Preface

Intended Audience

This document is intended for:

- Network engineers
- Technical support and servicing engineers
- Network administrators

Technical Support

- Ruijie Networks Website: https://www.ruijienetworks.com/
- Technical Support Website: https://ruijienetworks.com/support
- Case Portal: https://caseportal.ruijienetworks.com
- Community: https://community.ruijienetworks.com
- Technical Support Email: service_rj@ruijienetworks.com
- Live Chat: https://www.ruijienetworks.com/rita

Conventions

1. Conversions

Convention	Description
Bold font	Commands, command options, and keywords are in **bold** font.
Italic font	Arguments for which you supply values are in *italic* font.
[ ]	Elements in square brackets are optional.
{ x | y | z }	Alternative keywords are grouped in braces and separated by vertical bars.
[x | y | z]	Optional alternative keywords are grouped in brackets and separated by vertical bars.

&<1-n>	The argument before the sign (&) can be input for consecutive 1- n times.
//	Double slashes at the beginning of a line of code indicate a comment line.

2. Signs

The signs used in this document are described as follows:

Warning

An alert that calls attention to important rules and information that if not understood or followed can result in data loss or equipment damage.

Caution

An alert that calls attention to essential information that if not understood or followed can result in function failure or performance degradation.

Note

An alert that contains additional or supplementary information that if not understood or followed will not lead to serious consequences.

Specification

An alert that contains a description of product or version support.

3. Note

The manual offers configuration information (including model, port type and command line interface) for indicative purpose only. In case of any discrepancy or inconsistency between the manual and the actual version, the actual version prevails.

Contents

Preface I

1 Product Introduction 1

1.1 Overview 1

1.2 Product Appearance 1

1.3 Package Contents 4

1.4 Technical Specifications 5

1.4.1 Dimensions and Weight 5

1.4.2 Radio Specifications 6

1.4.3 Port Specifications 7

1.4.4 Power Supply and Consumption 8

1.4.5 Environment and Reliability 9

1.5 LED and Button 9

1.6 Optical Module 11

2 Preparing for Installation 14

2.1 Safety Precautions 14

2.1.1 General Safety Precautions 14

2.1.2 Handling Safety 14

2.1.3 Electric Safety 15

2.1.4 Storage Safety 15

2.2 Installation Environment Requirements 15

2.2.1 Bearing Requirements 16

2.2.2 Ventilation Requirements 16

2.2.3 Space Requirements 16

2.2.4 Temperature/Humidity Requirements 16

2.2.5 Cleanliness Requirements 17

2.2.6 Anti-interference Requirements 18

2.2.7 Other Requirements 18

2.3 Tools 18

3 Installing the AP 20

3.1 Installation Procedure 20

3.2 Before You Begin 20

3.3 Precautions 22

3.4 Installing the AP 22

3.4.1 Mounting on the Ceiling 22

3.4.2 Mounting on the Wall 25

3.5 Installing a Security Lock 27

3.6 Installing an Optical Module 29

3.7 Removing the AP 30

3.8 Connecting Cables 31

3.9 Bundling Cables 31

3.9.1 Precautions 31

3.9.2 Bundling Steps....31

3.10 Checking After Installation....32

3.10.1 Checking the AP....32

3.10.2 Checking Cable Connections....32

3.10.3 Checking the Power Supply....32

4 Verifying the Operating Status....33

4.1 Setting up the Configuration Environment....33

4.2 Powering on the Device....33

4.2.1 Checklist Before Power-on....33

4.2.2 Checklist After Power-on....33

5 Monitoring and Maintenance....34

5.1 Monitoring....34

5.1.1 LED....34

5.1.2 CLI Commands....34

5.2 Remote Maintenance....34

5.3 Hardware Maintenance....34

6 Troubleshooting....35

6.1 General Troubleshooting Flowchart....35

6.2 Common Troubleshooting Procedures....35

6.2.1 Ethernet Port Is Not Working After the Ethernet Cable Is Plugged In....35

6.2.2 LED Is Off for a Long Time....35

6.2.3 LED Keeps Steady Red 36

6.2.4 LED Keeps Steady Green 36

6.2.5 LED Keeps Blinking Blue at an Interval of 0.2s (in Fit Mode) 36

6.2.6 LED Does Not Turn Steady Blue or Blinking Blue 36

6.2.7 Radio Signal of the AP Cannot Be Found 36

7 Appendix 37

7.1 Connectors and Media 37

7.2 Optical Modules and Specifications 39

7.3 Cabling Recommendations 40

7.4 DC Power Connector Specifications 44

1 Product Introduction

1.1 Overview

RG-AP880-E is a Wi-Fi 6E wireless access point (AP) released by Ruijie Networks for indoor scenarios in the higher education, government, general education, finance, and business sectors. It supports three radios, among which the 2.4 GHz band can provide a maximum data rate of 574 Mbps, the 5 GHz band can provide a maximum data rate of up to 2.402 Gbps, and the 6 GHz band can provide a maximum data rate of up to 4.804 Gbps. The AP can provide a combined date rate of up to 7.780 Gbps, which eliminates the bottleneck in wireless performance.

The design of RG-AP880-E considers factors including wireless network security, radio control, mobile access, QoS, seamless roaming, and IoT module expansion. The RG-AP880-E can be used together with Ruijie's access controllers (ACs) to implement STA data forwarding, security, and access control.

The RG-AP880-E can work in IEEE 802.11ax, 802.11ac, and 802.11n modes simultaneously. It can be mounted against a wall, a ceiling, and other location. Moreover, the RG-AP880-E supports local power supply and power over Ethernet (PoE), which can be selected based on power supply conditions. It is very suitable for large campuses, enterprise offices, hotspots, and other high-density scenarios.

1.2 Product Appearance

The RG-AP880-E provides three RF ports, two Ethernet copper ports, one 5G SFP port, one RJ45 console port, one power port for external power supply device, one USB port, and one reset button. For the two Ethernet copper ports, LAN 1 port supports IEEE 802.3af/at/bt-compliant PoE and LAN 2/IoT port can be used to supply power to the IoT module (48 V/0.27 A, maximum power of 12.95 W).

Figure 1-1 Top View

Figure 1-2 Front View

Table 1-1 LED

No.	Item	Description
1	LED	System running status

Figure 1-3Side View

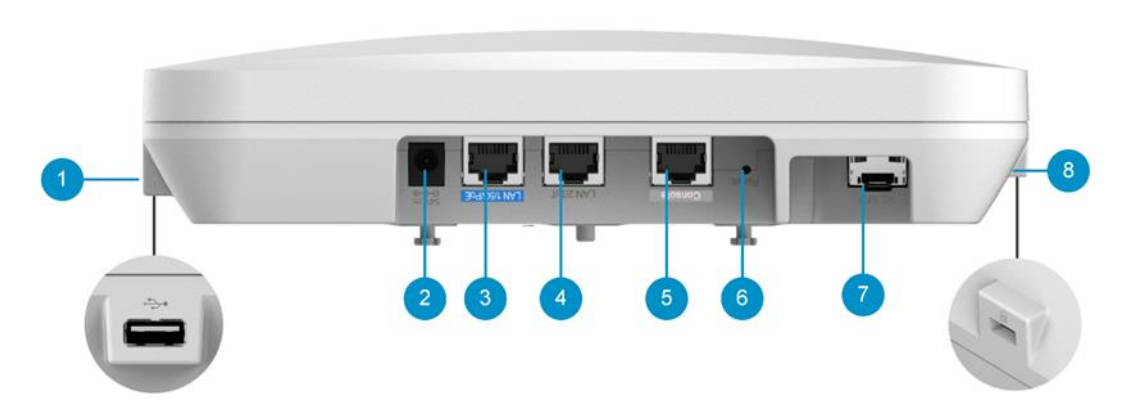

Table 1-2 Button and Ports

No.	Item	Description
1	USB port	Establishes a USB connection.
2	DC power connector	Connects to a 54 V DC power supply device to power an AP.
3	LAN1/PoE port	Is an uplink service port for a wired Ethernet connection and data transmission, supporting IEEE 802.3af/at/bt-compliant PoE.
4	LAN2/IoT port	Is a downlink service port for a wired Ethernet connection and data transmission, supporting power supply to the IoT module (48 V/12.95 W).
5	Console port	Connects to a serial port cable for device management.
6	Reset button	Is used to reboot the device or restore the device to factory

No.	Item	Description
		settings.
7	5G SFP port	Is an uplink service port for data transmission.
8	Lock slot	Connects to a security lock.

Figure 1-4 Bottom View

1.3 Package Contents

Table 1-3 Package Contents

No.	Item	Quantity
1	AP	1
2	Mounting bracket	1

No.	Item	Quantity
3	Wall anchor	4
4	Phillips pan head screw M4.2 x 20 mm	4
5	Warranty card	1
6	User manual	1

1.4 Technical Specifications

1.4.1 Dimensions and Weight

Table 1-4 Dimensions and Weight

Dimensions and Weight	RG-AP880-E
Physical Dimensions (W x D x H)	230 mm × 230 mm × 51 mm (9.06 in. × 9.06 in. × 2.01 in.)
Weight	AP: 1.0 kg (2.20 lb.) Mounting bracket: 0.1 kg (0.22 lb.)
Installation	Ceiling mounting and wall mounting
Lock option	Securing latch and Kensington lock
Mounting bracket dimensions (W x D x H)	120 mm × 120 mm × 8 mm (4.72 in. × 4.72 in. × 0.31 in.)
Mounting hole pattern	53 mm × 53 mm (2.09 in. × 2.09 in.) For details, see 3.2 Before You Begin.
Mounting hole diameter	6.5 mm (0.26 in.)

1.4.2 Radio Specifications

Table 1-5 Radio Specifications

Radio Specifications	RG-AP880-E
Radio design	Tri-radio design Up to 8 spatial streams Radio 1: 2.4 GHz, 2 spatial streams: 2x2, MU-MIMO Radio 2: 5 GHz, 4 spatial streams: 2x2, MU-MIMO Radio 3: 6 GHz, 2 spatial streams: 4x4, MU-MIMO
Operating frequencies	Radio 1: 802.11b/g/n/ax: 2.400 GHz to 2.4835 GHz Radio 2: 802.11a/n/ac/ax: 5.150 GHz to 5.350 GHz, 5.470 GHz to 5.725 GHz, 5.725 GHz to 5.850 GHz Radio 3: 802.11ax: 5.925 GHz to 7.125 GHz (Note: Country-specific restrictions apply.)
Data rate	Radio 1: 2.4 GHz, 574 Mbps Radio 2: 5 GHz, 2.402 Gbps Radio 3: 6 GHz, 4.804 Gbps Combined: 2.4 GHz + 5 GHz + 6 GHz, 7.780 Gbps
Antenna type	Built-in omnidirectional antenna
Antenna gain	3 dBi
Max. transmit power	20 dBm (Note: The transmit power is limited by local regulatory requirements.)
Power increment	1 dBm

Radio Specifications	RG-AP880-E
Modulation	IEEE 802.11b: BPSK, QPSK, and CCK IEEE 802.11a/g/n: BPSK, QPSK, 16-QAM, and 64-QAM IEEE 802.11ac: BPSK, QPSK, 16-QAM, 64-QAM, and 256-QAM IEEE 802.11ax: BPSK, QPSK, 16-QAM, 64-QAM, 256-QAM, and 1024-QAM
Receive sensitivity	IEEE 802.11b: –96 dBm (1 Mbps), –93 dBm (5 Mbps), –89 dBm (11 Mbps) IEEE 802.11a/g: –91 dBm (6 Mbps), –85 dBm (24 Mbps), –80 dBm (36 Mbps), –74 dBm (54 Mbps) IEEE 802.11n: –90 dBm (MCS0), –70 dBm (MCS7), –89 dBm (MCS8), –68 dBm (MCS15) IEEE 802.11ac: HT20: –88 dBm (MCS0), –63 dBm (MCS9) IEEE 802.11ac: HT40: –85 dBm (MCS0), –60 dBm (MCS9) IEEE 802.11ac: HT80: –82 dBm (MCS0), –57 dBm (MCS9) IEEE 802.11ax: HE80: –82 dBm (MCS0), –57 dBm (MCS9), –52 dBm (MCS11) IEEE 802.11ax: HE160: –79 dBm (MCS0), –53 dBm (MCS9), –50 dBm (MCS11)

1.4.3 Port Specifications

Table 1-6 Port Specifications

Port Specifications	RG-AP880-E
Bluetooth	Bluetooth 5.1
USB port	USB 3.0

Fixed service port	Uplink: One 100/1000/2500/5000Base-T auto-negotiation Ethernet port, supporting IEEE 802.3af/at/bt-compliant PoE One 5G SFP port, compatibility with 1 G and 2.5 G SFP ports Downlink: One 10/100/1000Base-T auto- negotiation Ethernet port LAN2 port supports power supply to the IoT module (48 V/12.95 W)
Fixed management port	One RJ45 console port
Status LED	One system status LED
Button	One reset button

1.4.4 Power Supply and Consumption

Table 1-7 Power Supply and Consumption

Power Supply and Consumption	RG-AP880-E
Input power supply	(1) DC power supply (DC input voltage and current: 54 V/1.1 A) (2) PoE/PoE+/PoE++ power supply (IEEE 802.3af/at/bt-compliant)
External power supply	Supported. The IoT module can be expanded through an Ethernet port.
Max. power consumption	40 W

Caution

- To power the AP by using PoE, ensure that the device at the other end of the Ethernet cable supports IEEE 802.3af power supply.

- The AP adopts the fan-free design. Therefore, maintain sufficient clearance around the AP for air circulation.
- The AP is advised to work in IEEE 802.3at power supply mode to achieve the best performance.
- If IEEE 802.3af power supply is adopted, the AP can be normally powered on, but only one stream is available for 2.4 GHz and 5 GHz, and the LAN2 port and USB port cannot supply power to external devices.
- If IEEE 802.3at power supply is adopted, the AP can be normally powered on, but the LAN2 port and USB port cannot supply power to external devices.

1.4.5 Environment and Reliability

Table 1-8 Standard Compliance

Environment and Reliability	RG-AP880-E
Temperature	Operating temperature: –10°C to +50°C (14°F to 122°F) Storage temperature: –40°C to +70°C (–40°F to +158°F) At a height between 3000 m (9842.52 ft.) and 5000 m (16404.20 ft.) above the sea level, every time the altitude increases by 166 m (546 ft.), the maximum temperature decreases by 1°C (1.8°F).
Humidity	Working humidity: 5% RH to 95% RH (non-condensing) Storage humidity: 5% RH to 95% RH (non-condensing)
Regulatory compliance	EN 55032, EN 55035, EN 61000-3-3, EN IEC 61000-3-2, EN 301 489-1, EN 301 489-3, EN 301 489-17, EN 300 328, EN 301 893, EN 300 440, FCC Part 15, ETSI EN 303 687, EN IEC 62311, IEC 62368-1, and EN 62368-1

1.5 LED and Button

Note

The LED description applies to both Fit and Fat modes, unless otherwise specified.

Table 1-9 LED Status

Status	Frequency	Description
Off	N/A	The AP is not powered on. The AP is powered on, but the LED is manually turned off.
Steady green	N/A	The software system of the AP is being initialized.
Steady red	N/A	The system is running properly, but the uplink service port is in link-down state.
Blinking red at an interval of 1s	On for 3s Off for 1s	In Fit mode, the setup of a CAPWAP tunnel between the AP and AC expires.
Blinking blue at an interval of 0.2s	On for 0.2s Off for 0.2s	In Fit or MACC mode, the software system of the AP is being updated.
Steady blue	N/A	The system is running properly, but no STA is online.
Blinking blue at an interval of 1s	On for 1s Off for 1s	The system is running properly and one or more STAs are online.
Blinking red at an interval of 0.2s	On for 0.2s Off for 0.2s	In Fit mode, the AP is being located.

Table 1-10 Reset Button

Button	Operation	Result
Reset button	Press the button for less than 2s.	Reboot the device.
	Press and hold the button for more than 5s.	Restore the device to default settings.

1.6 Optical Module

The peer device connected to the 2.5 Gbps optical port of the AP should provide an optical or copper port. However, the two devices may use different optical modules and support different port rates, so the final negotiated access rate is not fixed. For details, see Table 1-11 and Table 1-12.

Table 1-11 Rate Negotiation for an Optical Port on the Peer Device

Optical Port Rate of the AP	Optical Module Rate	Negotiated Rate Supported by the Port on the Peer Device		
		1 Gbps	1 Gbps/10 Gbps/Auto	1 Gbps/2.5 Gbps/5 Gbps/10 Gbps/Auto
1 Gbps	3 Gbps	1 Gbps	1 Gbps	1 Gbps
1 Gbps	1 Gbps	1 Gbps	1 Gbps	1 Gbps
2.5 Gbps	3 Gbps	Not supported	Not supported	2.5 Gbps
2.5 Gbps	1 Gbps	1 Gbps	1 Gbps	1 Gbps

Optical Port Rate of the AP	Optical Module Rate	Negotiated Rate Supported by the Port on the Peer Device		
		1 Gbps	1 Gbps/10 Gbps/Auto	1 Gbps/2.5 Gbps/5 Gbps/10 Gbps/Auto
5 Gbps	6 Gbps	Not supported	Not supported	5 Gbps
5 Gbps	1 Gbps	1 Gbps	1 Gbps	1 Gbps

Table 1-12 Rate Negotiation for an Electrical Port on the Peer Device

Optical Port Rate of the AP	O/E Conversion Module Rate	Negotiated Rate Supported by the Port on the Peer Device		
		1 Gbps	1 Gbps/10 Gbps/Auto	1 Gbps/2.5 Gbps/5 Gbps/10 Gbps/Auto
1 Gbps	2.5G	Not supported	Not supported	Not supported
1 Gbps	1 Gbps	1 Gbps	1 Gbps	1 Gbps
2.5 Gbps	2.5 Gbps	Not supported	Not supported	2.5 Gbps
2.5 Gbps	1 Gbps	Not supported	Not supported	Not supported
5 Gbps	5 Gbps	Not supported	Not supported	5 Gbps
5 Gbps	1 Gbps	1 Gbps	1 Gbps	1 Gbps

Caution

- The 2.5 Gbps optical port of the AP does not support rate negotiation. If an O/E conversion module is used, ensure the same access rate for the AP, O/E conversion module, and port on the peer device.
- The AP supports an uplink combo port. If both uplink optical port and electrical port are connected to cables, the AP selects the uplink optical port for data transmission (with the uplink electrical port automatically disabled). After the cable of the uplink optical port is disconnected, the uplink electrical port is automatically enabled.

2 Preparing for Installation

2.1 Safety Precautions

Note

- To avoid personal injury and device damage, carefully read the safety precautions before you install the device.
- The following safety precautions may not cover all possible dangers.

2.1.1 General Safety Precautions

- Do not expose the AP to high temperature, dusts, or harmful gases. Do not install the AP in an inflammable or explosive environment. Keep the AP away from EMI sources such as large radar stations, radio stations, and substations. Do not subject the AP to unstable voltage, vibration, and noises.
- The installation site should be free from water flooding, seepage, dripping, or condensation. The installation site should be selected according to network planning, communications equipment features, and considerations such as climate, hydrology, geology, earthquake, electrical power, and transportation.
- Keep the site where the device is installed dry, so it is recommended not to install the device near the ocean. Keep the device at least 500 meters away from the ocean and do not face it towards the sea breeze.
- Do not place the device in walking areas.
- During the installation and maintenance, do not wear loose clothes, ornaments, or any other things that may be hooked by the chassis.
- Keep tools and components away from walking areas.

2.1.2 Handling Safety

- Do not frequently move the device.
- Cut off all the power supplies and unplug all power cords before moving or handling the device.

2.1.3 Electric Safety

Warning

- Improper or incorrect electric operations may cause a fire, electric shock, and other accidents, and lead to severe and fatal personal injury and device damage.
- Direct or indirect contact with high voltage or mains power supply via wet objects may cause fatal dangers.

- Observe local regulations and specifications during electric operations. Only personnel with relevant qualifications can perform such operations.
- Check whether there are potential risks in the work area. For example, check whether the ground is wet.
- Find the position of the indoor emergency power switch before installation. Cut off the power switch in case of accidents.
- Confirm the preceding items before you cut off the power supply.
- Do not place the device in a damp/wet location. Do not let any liquid enter the chassis.
- Keep the device far away from grounding or lightning protection devices for power equipment.
- Keep the device away from radio stations, radar stations, high-frequency high-current devices, and microwave ovens.

2.1.4 Storage Safety

For proper working of the AP, the AP must be stored in an environment based on the storage temperature/humidity requirements in Specifications.

Caution

If the AP is stored for more than 18 months, power on the AP and run it for consecutive 24 hours to activate the AP.

2.2 Installation Environment Requirements

Install the device indoors to ensure its normal operation and prolonged service life.

The installation site must meet the following requirements.

2.2.1 Bearing Requirements

Evaluate the weight of the device and its accessories (such as the bracket and power supply module), and ensure that the ground of the installation site meets the requirements.

2.2.2 Ventilation Requirements

Reserve sufficient space in front of the air vents to ensure normal heat dissipation. After various cables are connected, bundle the cables or place them in the cable management bracket to avoid blocking air inlets.

2.2.3 Space Requirements

Do not install the AP close to the wall. Maintain a minimum clearance of 0.4 m (15.75 in.) around the device to ensure proper cooling and ventilation.

2.2.4 Temperature/Humidity Requirements

To ensure the normal operation and prolonged service life of the device, maintain an appropriate temperature and humidity in the equipment room.

The equipment room with too high or too low temperature and humidity for a long period may damage the device.

- In an environment with high relative humidity, the insulating material may have poor insulation or even leak electricity.
- In an environment with low relative humidity, the insulating strip may dry and shrink, loosening screws.
- In a dry environment, static electricity is prone to occur and damage the internal circuits of the device.
- Too high temperatures can accelerate the aging of insulation materials, greatly reducing the reliability of the device and severely affecting its service life.

Note

The ambient temperature and humidity of the device are measured at the point that is 1.5 m (59.06 in.) above the floor and 0.4 m (15.75 in.) before the device when there is no protective plate in front or at the back of the device.

2.2.5 Cleanliness Requirements

Dust poses a major threat to the running of the device. Indoor dust falling on the device may be adhered by static electricity, causing poor contact of metallic joints. Such electrostatic adherence may occur more easily when the relative humidity is low, not only affecting the service life of the device, but also causing communication faults. The following table describes the requirements for the dust content and granularity in the equipment room.

Table 2-1 Requirements for Dust

Dust	Unit	Content
Dust particles (diameter ≤ 0.5 μm)	Particles/m^3	≤ 1.4 x 10^7
Dust particles (0.5 μm < diameter ≤ 1 μm)	Particles/m^3	≤ 7 x 10^5
Dust particles (1 μm < diameter ≤ 3 μm)	Particles/m^3	≤ 2.4 x 10^5
Dust particles (3 μm < diameter ≤ 5 μm)	Particles/m^3	≤ 1.3 x 10^5

Apart from dust, the salt, acid, and sulfide in the air in the equipment room must also meet strict requirements. These harmful substances will accelerate metal corrosion and component aging. Therefore, the equipment room should be properly protected against the intrusion of harmful gases, such as sulfur dioxide, hydrogen sulfide, nitrogen dioxide, and chlorine gas. The following table lists limit values for harmful gases.

Table 2-2 Requirements for Gases

Gas	Average (mg/m^3)	Maximum (mg/m^3)
Sulfur dioxide (SO_2)	0.2	1.5
Hydrogen sulfide (H_2S)	0.006	0.03

Nitrogen dioxide (NO_2)	0.04	0.15
Ammonia gas (NH_3)	0.05	0.15
Chlorine gas (CI_2)	0.01	0.3

Note

Average refers to the average value of harmful gases measured in one week. Maximum refers to the upper limit of harmful gases measured in one week, and the maximum value cannot last for more than 30 minutes every day.

2.2.6 Anti-interference Requirements

- Take interference prevention measures for the power supply system.
- Keep the device away from the grounding equipment or lightning and grounding equipment of the power device as far as possible.
- Keep the device far away from high-frequency current devices such as high-power radio transmitting station and radar launcher.
- Take electromagnetic shielding measures when necessary.

2.2.7 Other Requirements

Regardless of whether the device is installed on the wall or ceiling, the following conditions must be met:

- Maintain sufficient clearance around the air vents of the device for heat dissipation.
- The installation site allows for proper cooling and ventilation.
- The installation side is sturdy enough to support the weight of the device and its accessories.

2.3 Tools

Table 2-3 Tools

Common Tools	Phillips screwdriver, wires, Ethernet cables, fastening bolts, diagonal pliers, and binding straps

Special Tools	Anti-static gloves, wire stripper, crimping pliers, RJ45 crimping pliers, and wire cutter
Meter	Multimeter and bit error rate tester (BERT)
Relevant Devices	PC, display, and keyboard

Note

The device is delivered without a tool kit. The tool kit and cables are customer-supplied.

3 Installing the AP

The RG-AP880-E must be installed and secured indoors.

Caution

Before installing the device, make sure that you have carefully read the requirements described in Chapter 2.

3.1 Installation Procedure

The installation steps are shown in the following figure.

Figure 3-1 Installation Procedure

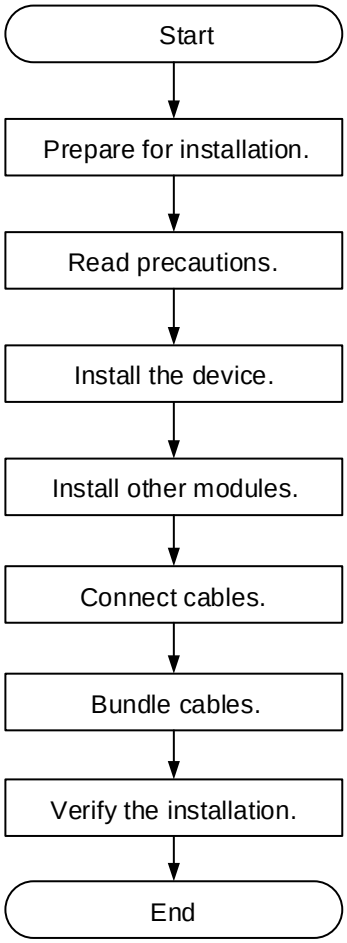

3.2 Before You Begin

Carefully plan and arrange the installation location, networking mode, power supply, and cabling before installing the device.

Confirm the following requirements before installation:

- The installation location provides sufficient space for heat dissipation.
- The installation location meets the temperature and humidity requirements of the device.
- The power supply and required current are available in the installation location.
- The Ethernet cables have been deployed in the installation location.
- The selected power supply meets the system power requirements.
- The position of the indoor emergency power switch is found before installation, so that the power switch can be cut off in case of accidents.
- For ceiling-mounted or wall-mounted AP, the mounting bracket dimensions and mounting hole pattern should meet the requirements in Dimensions and Weight. Figure 3-2 shows the mounting hole pattern.

Figure 3-2Mounting Bracket

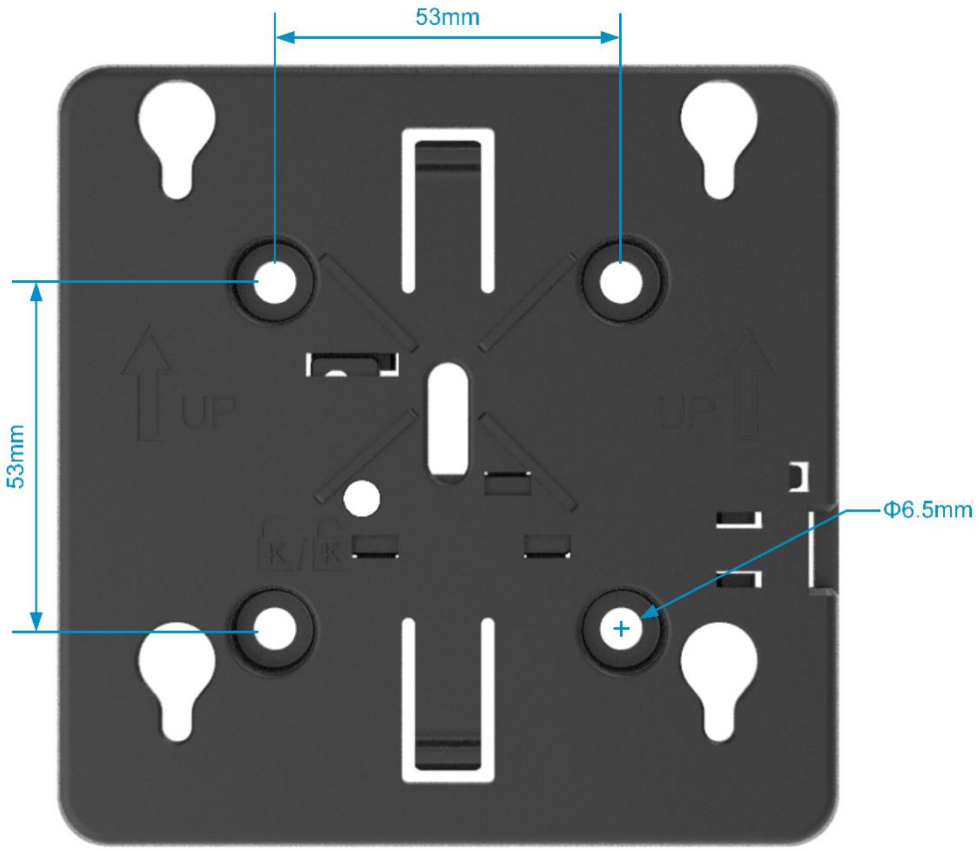

3.3 Precautions

To ensure the normal operation and prolonged service life of the AP, observe the following safety precautions:

- Do not power on the device during installation.
- Install the device in a well-ventilated location.
- Do not subject the device to high temperatures.
- Keep the device away from high-voltage power cables.
- Install the device indoors.
- Do not expose the device in a thunderstorm or strong electric field.
- Keep the device clean and dust-free.
- Cut off the power switch before cleaning the device.
- Do not wipe the device with a damp cloth.
- Do not wash the device with liquid.
- Do not open the enclosure when the device is working.
- Fasten the device tightly.

3.4 Installing the AP

Note

- You are advised to install the device where you can get the optimal coverage.
- In indoor areas, the signal coverage of a ceiling-mounted device is larger than that of a wall-mounted device. Please choose the ceiling-mounting method first.

3.4.1 Mounting on the Ceiling

(1) Drill four 6.5 mm (0.26 in.) diameter holes in the ceiling, 53 mm (2.09 in.) apart. Tap wall anchors into the holes, and drive screws through the mounting bracket into the anchors to secure the bracket.

Figure 3-3Attaching the Mounting Bracket to the Ceiling

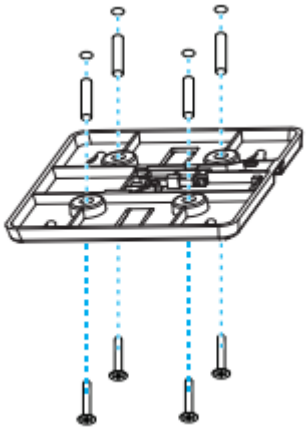

(2) Align the square feet on the rear of the AP with the mounting holes on the bracket.

Figure 3-4 Aligning the Square Feet with the Mounting Holes

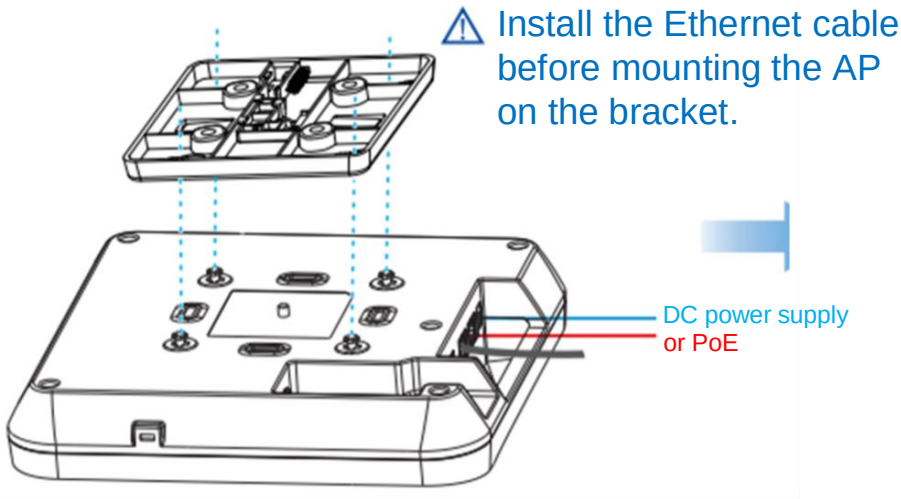

Caution

Install the Ethernet cables before mounting the AP on the bracket.

(3) Slide the AP onto the bracket in the opposite direction of the arrow on the mounting bracket until it clicks into place.

Figure 3-5 Mounting the AP on the Bracket

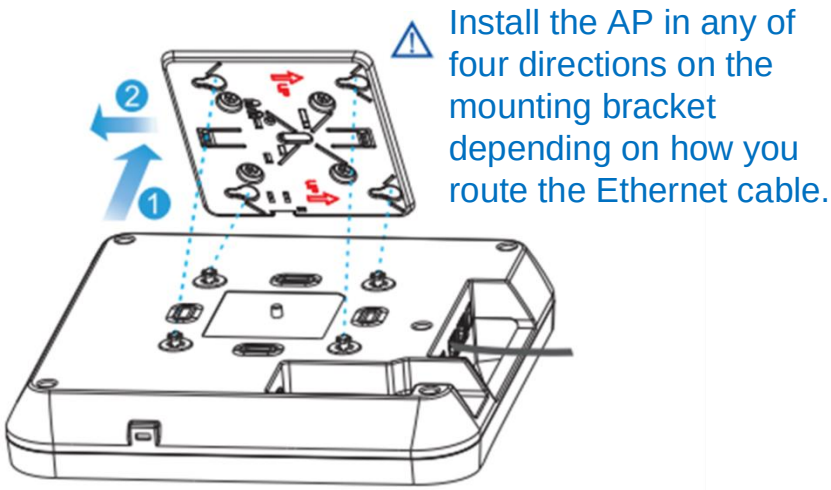

Caution

- The AP can be installed in any of four directions on the mounting bracket depending on how you route the Ethernet cable.
- The square feet should fit easily into the mounting holes. Do not forcibly push the AP into the holes.
- After installation, verify that the AP is securely fastened.

3.4.2 Mounting on the Wall

(1) Drill four 6.5 mm (0.26 in.) diameter holes in the wall and 53 mm (2.09 in.) apart, with the arrow on the mounting bracket facing up. Tap wall anchors into the holes, and drive screws through the mounting bracket into the anchors to secure the bracket.

Figure 3-6Attaching the Mounting Bracket to the Wall

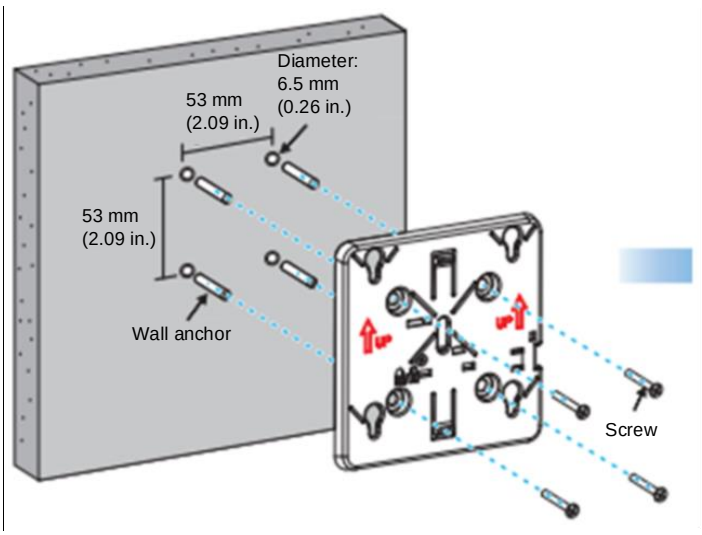

(2) Align the square feet on the rear of the AP with the mounting holes on the bracket.

Figure 3-7Aligning the Square Feet with the Mounting Holes

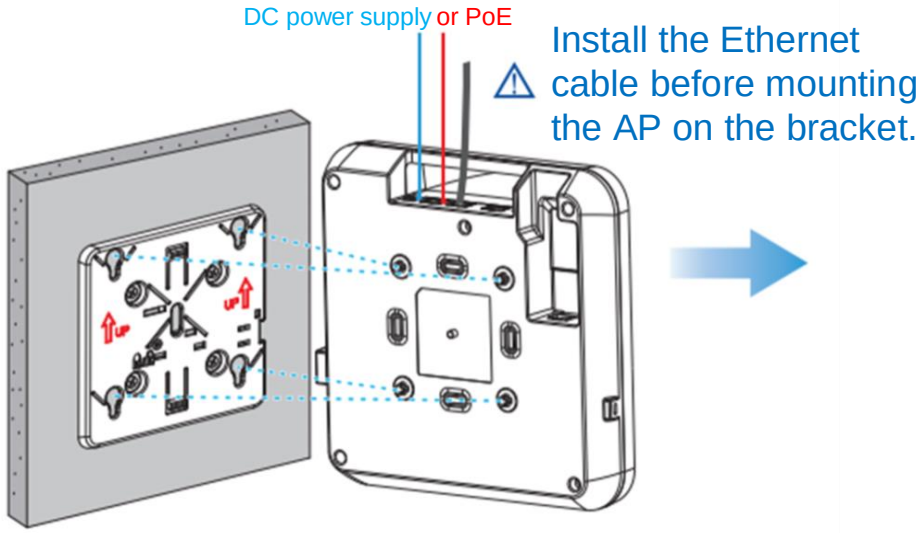

Caution

Install the Ethernet cables before mounting the AP on the bracket.

(3) Slide the AP into the holes in the opposite direction of the arrows on the mounting bracket until it clicks into place.

Figure 3-8 Mounting the AP on the Bracket

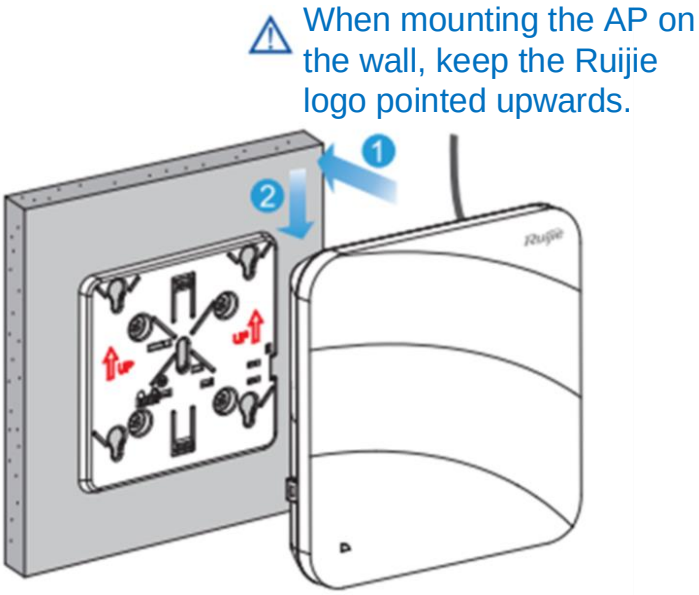

Caution

- When mounting the AP on the wall, keep the Ruijie logo pointed upwards.
- The square feet should fit easily into the mounting holes. Do not forcibly push the AP into the holes.
- After installation, verify that the AP is securely fastened.

3.5 Installing a Security Lock

(1) Loosen the screw on the mounting bracket and engage the security screw.

Figure 3-9 Engaging the Security Screw

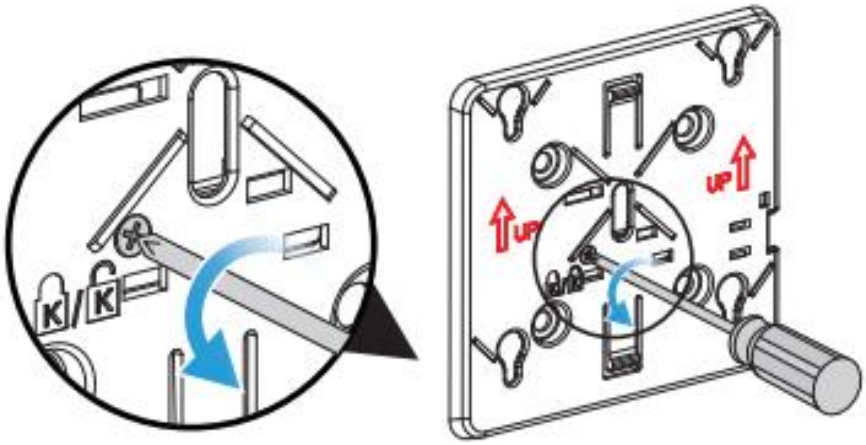

(2) Align the square feet on the rear of the AP over the mounting holes on the bracket, slide the AP in the opposite direction of the arrows on the mounting bracket until it clicks into place.

Figure 3-10 Mounting the AP on the Bracket

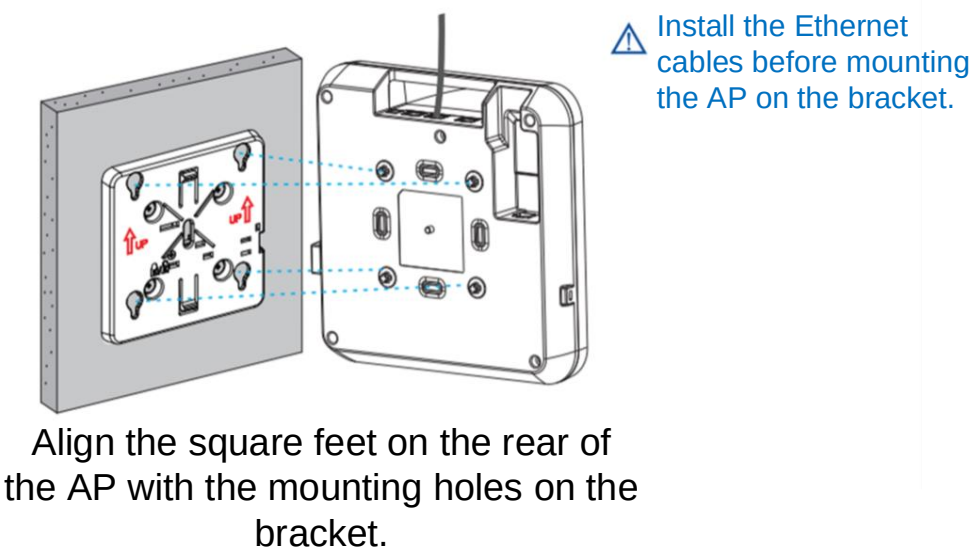

Caution

- Install the Ethernet cables before mounting the AP on the bracket.
- The security screw is optional and can be installed as needed.

3.6 Installing an Optical Module

(1) Insert the optical module.

Figure 3-11 Inserting the Optical Module

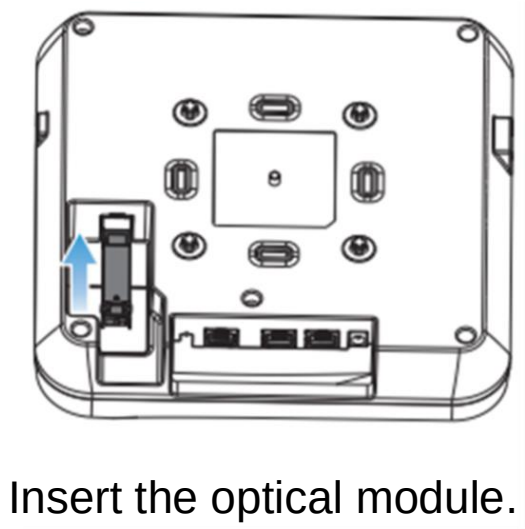

(2) Insert the optical fiber.

Figure 3-12 Inserting the Optical Fiber

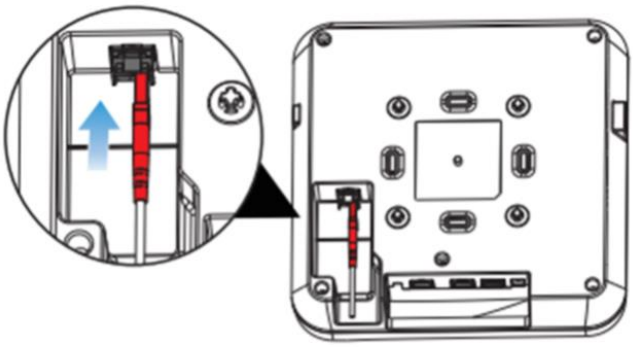

Insert the optical fiber.

3.7 Removing the AP

(1) If the AP is installed on the ceiling, hold the AP in your hands and slide it sideways and away from the bracket in the LAN port direction.

Figure 3-13 Removing a Ceiling-mounted AP

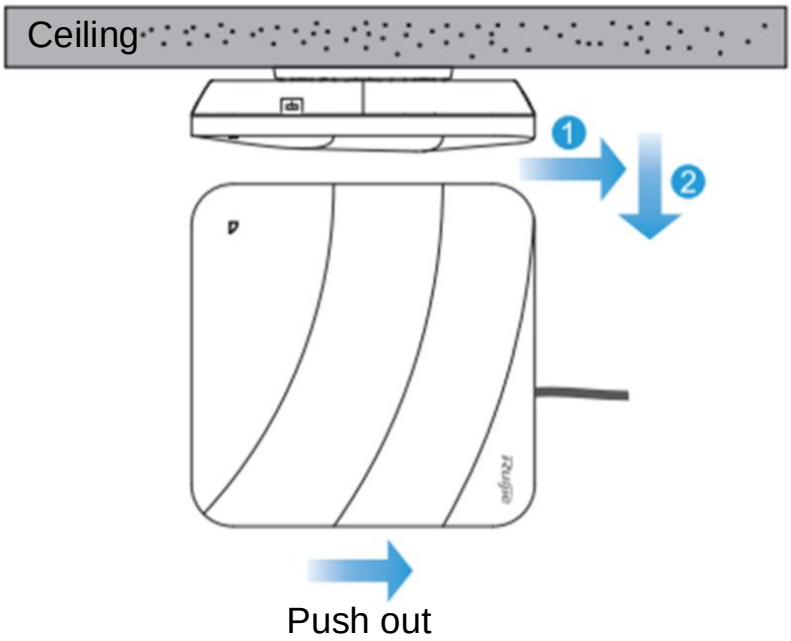

(2) If the AP is installed against a wall, hold the AP in your hands and push it upward and away from the bracket in the LAN port direction.

Figure 3-14 Removing a Wall-mounted AP

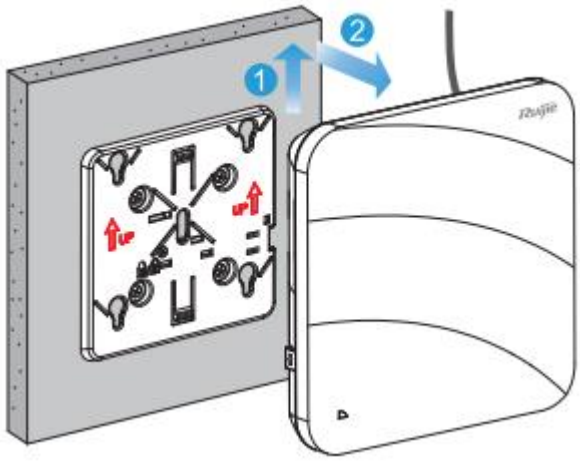

3.8 Connecting Cables

Connect twisted pairs with the LAN/PoE port on the AP. See 7.1 Connectors and Media for supported wiring of twisted pairs.

Caution

By default, the baud rate is set to **9600**, data bit to **8**, stop bit to **1**, and parity check and flow control to **none** on the console port of the AP. The console port is used only when you want to configure the AP manually.

3.9 Bundling Cables

3.9.1 Precautions

- The power cords and other cables should be bundled in a visually pleasing way.
- Bend twisted pairs naturally or to a large radius close to the connector.
- Do not over tighten twisted pair bundle as it may reduce the cable life and performance.

3.9.2 Bundling Steps

(1) Bundle the drop twisted pairs and route them to the LAN/PoE port.

(2) Fasten the twisted pair cables to the cable trough of the mounting bracket.

(3) Extend the twisted pairs under the AP and run in straight line.

3.10 Checking After Installation

3.10.1 Checking the AP

- Verify that the external power supply matches with the AP.
- Verify that the AP is securely fastened.

3.10.2 Checking Cable Connections

- Verify that the twisted pair cable matches the port type.
- Verify that cables are properly bundled.

3.10.3 Checking the Power Supply

- Verify that the power cord is properly connected and compliant with safety requirements.
- Verify that the AP is operational after power-on.

4 Verifying the Operating Status

4.1 Setting up the Configuration Environment

Use a DC or PoE to power the AP.

When setting up the environment, pay attention to the following:

- Verify that the AP is properly connected to the power source.
- Connect the AP to an AC through a twisted pair cable.
- When the AP is connected with a PC, verify that the PC and PoE switch are properly grounded.

4.2 Powering on the Device

4.2.1 Checklist Before Power-on

- Check whether the power cord is properly connected.
- Check whether the power supply voltage is the same as that required by the device.

4.2.2 Checklist After Power-on

After power-on, you are advised to check the following to ensure the normal operation of the AP:

- Check if any message is printed on the configuration interface of the device.
- Check whether the LED on the device is normal.

5 Monitoring and Maintenance

5.1 Monitoring

5.1.1 LED

You can observe the LED to monitor the AP in operation.

5.1.2 CLI Commands

You can run related commands on the CLI of the device to remotely monitor the device, including:

- Port configuration and status
- System logs

Note

- For details about the commands, see the corresponding configuration guide.
- You can log in to the AP remotely for maintenance.

5.2 Remote Maintenance

- If the AP works in fat mode, you can log in to the AP remotely for maintenance.
- If the AP works in fit mode, you can use an AC to centrally manage and maintain the AP.

5.3 Hardware Maintenance

If the hardware is faulty, please contact Ruijie technical support.

6 Troubleshooting

6.1 General Troubleshooting Flowchart

Figure 6-1 General Troubleshooting Flowchart

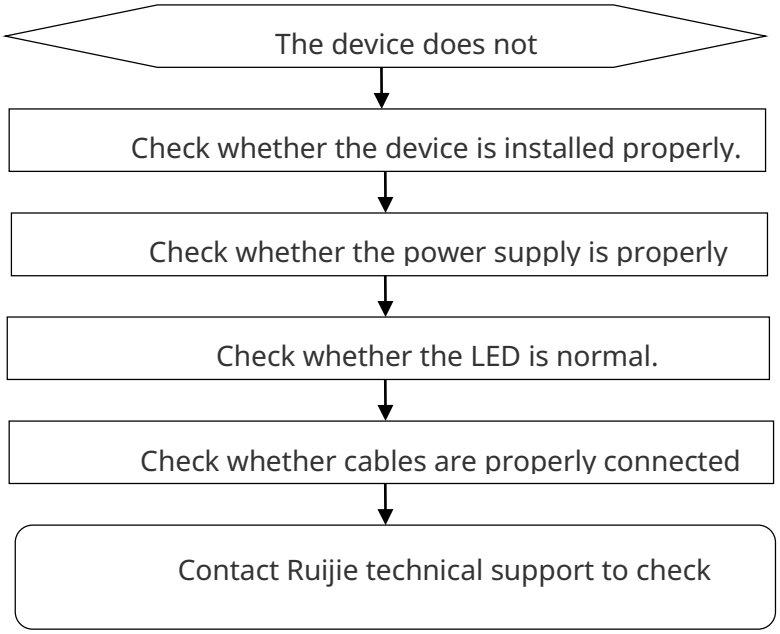

6.2 Common Troubleshooting Procedures

6.2.1 Ethernet Port Is Not Working After the Ethernet Cable Is Plugged In

Verify that the device at the other end of the Ethernet cable is working properly. And then verify that the Ethernet cable is capable of providing the required data rate and is properly connected.

6.2.2 LED Is Off for a Long Time

- If you use a PoE power supply, verify that the power source is IEEE 802.11af-compliant, and then verify that the cable is connected properly.
- If you use a DC power source, verify that the mains input is abnormal, and then verify that the power supply device works properly.

6.2.3 LED Keeps Steady Red

The LED keeps steady red for a long time, indicating that the Ethernet port is not connected. Verify the Ethernet connection.

6.2.4 LED Keeps Steady Green

The device performs initialization after power-on. During this period, the LED keeps steady green and does not turn normal blue until the initialization is completed. Note: If the steady green persists for an hour, it indicates that the device initialization fails and the device is faulty.

6.2.5 LED Keeps Blinking Blue at an Interval of 0.2s (in Fit Mode)

Sometimes the AP performs software upgrade after power-on. During this period, the LED keeps blinking blue at an interval of 0.2s and does not turn steady blue until the upgrade is completed. Do not plug or unplug the power cord when the LED is blinking as software upgrade takes time. If the blinking persists for 10 minutes, the device fails to complete software upgrade and is faulty.

6.2.6 LED Does Not Turn Steady Blue or Blinking Blue

If the LED does not turn steady blue or blinking blue after the system starts, the AP probably has not established a proper CAPWAP connection with the AC. Verify that the AC is operational and configured properly.

6.2.7 Radio Signal of the AP Cannot Be Found

(1) Verify that the device is properly powered.

(2) Verify that the Ethernet port is correctly connected.

(3) Verify that the AP is correctly configured.

(4) Move the client device to adjust the distance between the client and the AP.

7 Appendix

7.1 Connectors and Media

- 1000BASE-T/100BASE-TX/10BASE-T port

The 1000BASE-T/100BASE-TX/10BASE-T port is a 10/100/1000 Mbps auto-sensing port that supports auto MDI/MDIX Crossover.

Compliant with IEEE 802.3ab, the 1000BASE-T port requires 100-ohm Category 5/5e UTP or STP with a maximum distance of 100 meters (328.08 ft.).

The 1000BASE-T port requires all four pairs of wires be connected for data transmission. Table 7-1 shows the four pairs of wires for the 1000BASE-T port.

Table 7-1 1000BASE-T Twisted Pair Connections

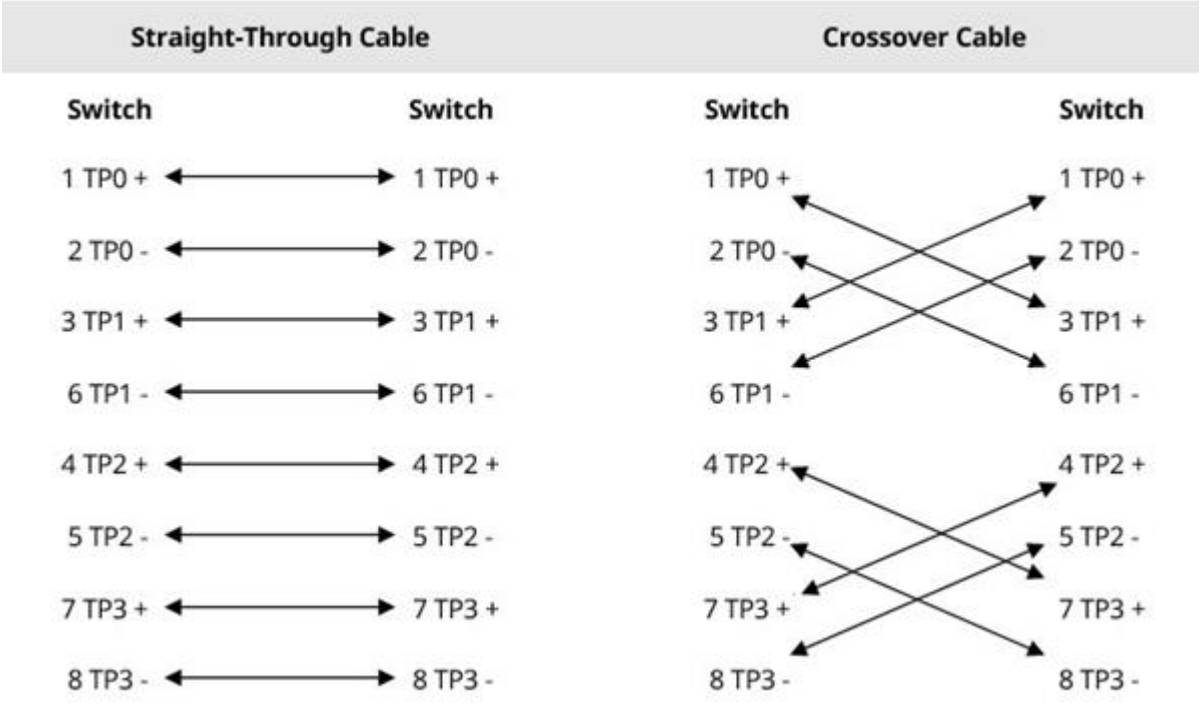

10BASE-T uses 100-ohm Category-3/4/5 UTP or STP, and 100BASE-TX uses 100-ohm Category-5 UTP or STP for connections. Both support a maximum length of 100 meters (328.08 ft.). Table 7-2 shows 100BASE-TX/10BASE-T pin assignments.

Table 7-2 100BASE-TX/10BASE-T Pin Assignments

Pin	Socket	Plug
1	Input Receive Data+	Output Transmit Data+
2	Input Receive Data-	Output Transmit Data-
3	Output Transmit Data+	Input Receive Data+
6	Output Transmit Data-	Input Receive Data-
4, 5, 7, 8	Not Used	Not Used

Table 7-3 shows wiring of straight-through and crossover cables for 100BASE-TX/10BASE-T.

Table 7-3 100BASE-TX/10BASE-T Twisted Pair Connections

7.2 Optical Modules and Specifications

We provide appropriate optical modules according to the port types. You can select the module to suit your specific needs. The optical module types and corresponding specifications are provided for reference.

Table 7-4 SFP Modules and Specifications

Wavelength (nm)	Cable Type	DDM	Transmit Power (dBm)		Receive Power (dBm)	
			Min.	Max.	Min.	Max.
1310 Tx/1550 Rx	SMF	Not supported	-9	-3	-	-18

Table 7-5 SFP Module Cabling Specifications

Port Type	Cable Type	Core Specification (μm)	Max. Cabling Distance
LC	SMF	9/125	0.3 km (984.25 ft.)

Caution

- For optical modules with a maximum cabling distance of over 40 km (24.85 miles) (including 40 km), install an inline optical attenuator to avoid overload when using short-distance SMFs.
- The optical module is a laser device. Please do not look into the laser beam directly.
- To keep the optical module clean, make sure that the unused ports remain capped.

7.3 Cabling Recommendations

During installation, route cable bundles upward or downward along the sides of the rack depending on the actual situation in the equipment room. All cable connectors should be placed at the bottom of the cabinet rather than be exposed outside of the cabinet. Power cords are routed beside the cabinet, and top cabling or bottom cabling is adopted according to the actual situation in the equipment room, such as the positions of the DC power distribution box, AC socket, or lightning protection box.

Requirement for the minimum cable bend radius:

- The bend radius of a fixed power cord, network cable, or flat cable should be over five times greater than their respective diameters. The bend radius of these cables that are often bent or plugged should be over seven times greater than their respective diameters.
- The bend radius of a fixed common coaxial cable should be over seven times greater than its diameter. The bend radius of the common coaxial cable that is often bent or plugged should be over 10 times greater than its diameter.
- The minimum bend radius of a high-speed cable, such as an SFP+ cable should be over five times the overall diameter of the cable. If the cable is frequently bent, plugged or unplugged, the bend radius should be over 10 times the overall diameter.

- Precautions for cable bundling
  - Before cables are bundled, mark labels and stick the labels to cables wherever appropriate.
  - Cables should be neatly and properly bundled in the cabinet without twisting or bending, as shown in Figure 7-1.

Figure 7-1 Bundling Cables

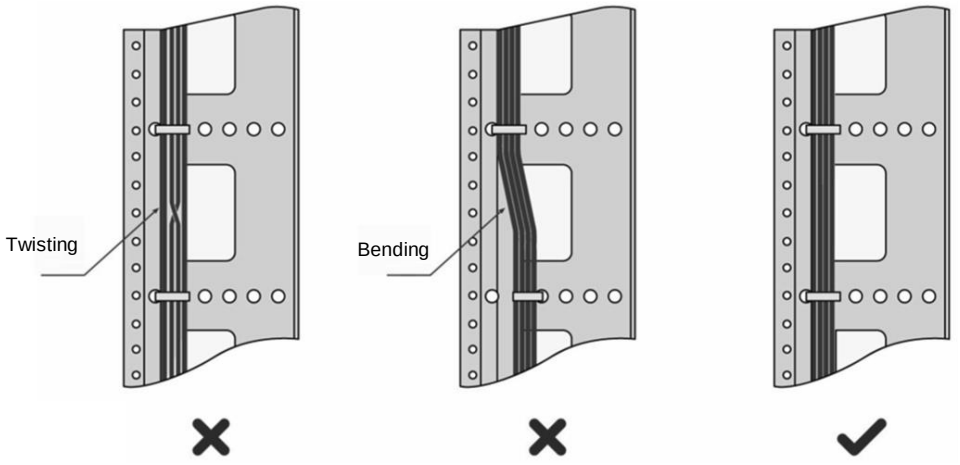

- Cables of different types (such as power cables, signal cables, and ground cables) should be separated in cabling and bundling. Mixed bundling is not allowed. When they are close to each other, it is recommended to adopt crossover cabling. In the case of parallel cabling, maintain a minimum distance of 30 mm (1.18 in.) between power cords and signal cables.
- The cable management brackets and cabling troughs inside and outside the cabinet should be smooth without sharp corners.
- The metal hole traversed by cables should have a smooth and fully rounding surface or an insulated lining.
- Use cable ties to bundle up cables properly. Please do not connect two or more cable ties to bundle up cables.
- After bundling up cables with cable ties, cut off the remaining part. The cut should be smooth and trim, without sharp corners, as shown in Figure 7-2.

Figure 7-2 Cutting off Excess Cable Tie

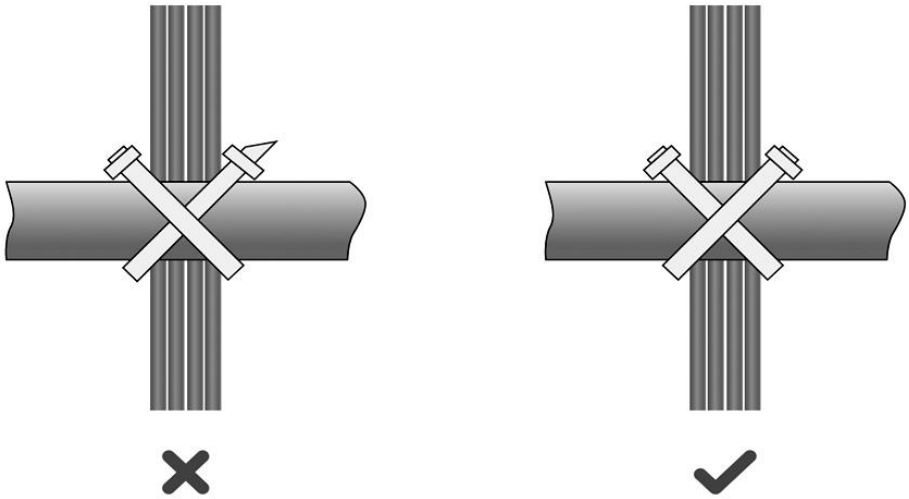

- When cables need to be bent, bind them first but do not tie cable ties within the bend. Otherwise, stress may be generated on the cables and cause the wires inside to break, as shown in Figure 7-3.

Figure 7-3 Do Not Tie Cable Ties within the Bend

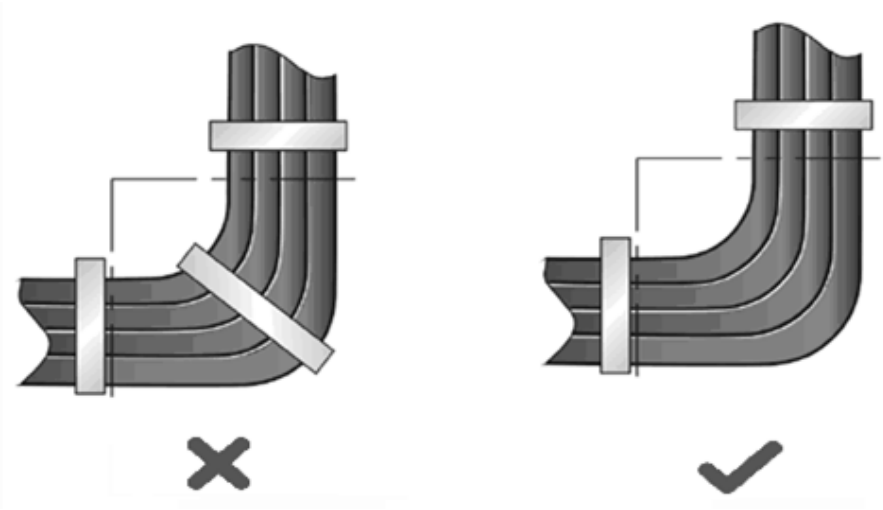

- Cables not to be assembled or remaining parts of cables should be folded and placed in a proper position of the cabinet or cable trough. A proper position does not affect device running or damage the device or cable.
- 220 V and –48 V power cables must not be bundled on the guide rails of moving parts.
- The power cables connecting moving parts such as door grounding wires should be reserved with some access after assembled to avoid suffering tension or stress. When the moving part reaches the installation position, the remaining cable part should not be in contact with heat sources, sharp corners, or sharp edges. If heat sources cannot be avoided, high-temperature cables should be used.
- When screw threads are used to fasten cable terminals, the bolt or screw must be tightly fastened, and anti-loosening measures should be taken, as shown in Figure 7-4.

Figure 7-4 Fastening Cable Lugs

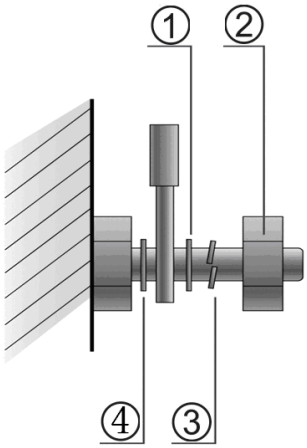

Note:	① Flat washer	③ Spring washer
	② Nut	④ Flat washer

- Hard power cords should be fastened in the terminal connection area to prevent stress on terminal connection and cable.
- Do not use self-tapping screws to fasten terminals.
- Power cords of the same type and in the same cabling direction should be bundled up into cable bunches, with cables in cable bunches clean and straight.
- Cables need to be tied according to the following table.

Cable Bunch Diameter (mm)	Distance Between Every Binding Point (mm)
10 mm (0.39 in.)	80 mm to 150 mm (3.15 in. to 5.91 in.)
10 mm to 30 mm (0.39 in. to 1.18 in.)	150 mm to 200 mm (5.91 in. to 7.87 in.)
30 mm (1.18 in.)	200 mm to 300 mm (7.87 in. to 11.81 in.)

- No knot is allowed in cabling or bundling.
- For wiring terminal blocks (such as circuit breakers) with cord end terminals, the metal part of the cord end terminal should not be exposed outside the terminal block when assembled.

7.4 DC Power Connector Specifications

- Input voltage: 54 V DC
- Rated current: 1.1 A

Table 7-6 Technical Specifications of the DC Power Connector

Inner Diameter	Outer Diameter	Depth	Polarity
2.1 mm (0.08 in.)	5.5 mm (0.22 in.)	9.5 mm (0.37 in.)	Center positive
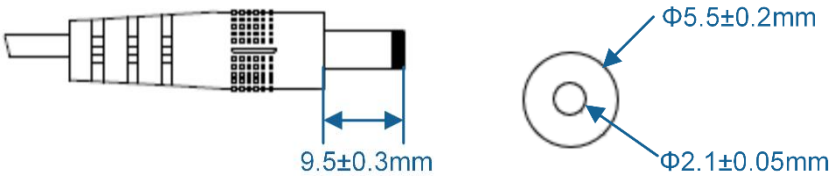
Figure 7-5 DC Power Connector Dimensions